DESIGN AND SIMULATION OF MAXIMUM POWER POINT TRACKING CONTROLLER FOR SOLAR PHOTOVOLTAIC SYSTEMS BY PERTURB AND OBSERVE METHOD

A MASTER'S THESIS

in

Electrical & Electronic Engineering

Atilim University

BY

KARAM SAMEER QASIM QASSAB

JANUARY 2015

GCRIS

DESIGN AND SIMULATION OF MAXIMUM POWER POINT TRACKING CONTROLLER FOR SOLAR PHOTOVOLTAIC SYSTEMS BY PERTURB AND OBSERVE METHOD

A THESIS SUBMITTED TO

THE GRADUATE SCHOOL OF NATURAL AND APPLIED SCIENCES

OF

ATILIM UNIVERSITY

BY

KARAM SAMEER QASIM QASSAB

IN PARTIAL FULFILLMENT OF THE REQUIREMENTS FOR THE DEGREE OF

MASTER OF SCIENCE

IN

THE DEPARTMENT OF ELECTRICAL ENGINEERING

JANUARY 2015

GCRIS

Approval of the Graduate School of Natural and Applied Sciences, Atılım University.

_____

(.....)

Director

I certify that this thesis satisfies all the requirements as a thesisfor the degree of Master of Science.

_____

(Associate prof. Dr.ElifUrayAydın)

Head of Department

This is to certify that we have read the thesis “Optimum method in maximum power point tracking using perturb & observe for photovoltaic solar system” submitted by “Karam Qassab” and that in ouropinion it is fully adequate, in scope and quality, as a thesis forthe degree of Master of Science.

_____ _____

Assistant Prof. Dr. Alparslan ÇağrıYapıcı

Supervisor

Examining Committee Members

..... _____

..... _____

..... _____

Date: 25.01.2015

STATEMENT OF NON PLAGIARISM

I declarant guarantee that all data, knowledge and information in this document has been obtained, processed and presented in accordance with academic rules and ethical conduct. Based on these rules and conduct, I have fully cited and referenced all material and results that are not original to this work.

Name, Last Name: Karam Sameer Qasim QASSAB

Signature:

GCRIS

ABSTRACT

DESIGN AND SIMULATION OF MAXIMUM POWER POINT TRACKING CONTROLLER FOR SOLAR PHOTOVOLTAIC SYSTEMS BY PERTURB AND OBSERVE METHOD

QASSAB, Karam Sameer Qasim

M.S., Electrical Engineering Department

Supervisor: Assistant Prof. Alparslan ÇağrıYapıcı

January 2015, 33 pages

In this thesis, Perturb and Observe (P&O) Algorithm has been used to improve the efficiency of solar panel photovoltaic (PV) power generation system at different temperatures and at different insulation conditions. Using this method, PV array response has been analyzed by simulating temperature and insulation parameters. Accordingly; it has been seen that the current and the voltage were affected negatively at temperature increase, and on the contrary, they were affected positively with insulation increase. It has also been seen that, the increase of the resistance pulled down the MPPT. In this work, MPPT and DC-DC boost converter are implemented on MATLAB software. Beside these VHDL code is generated for Field Programmable Gate Array (FPGA).

Keywords: Maximum power point tracking (MPPT), Perturb & observe method, Photovoltaic system, Solar system.

ÖZ

SOLAR FOTOVOLTİK SİSTEMLERİ İÇİN DEĞİŞTİR GÖZLE METODU KULLANARAK MAKSİMUM GÜÇ NOKTASI İZLEYİCİ KONTROL DEVRESİ TASARIMI VE BENZETİMİ

QASSAB ,Karam Sameer Qasim

Yüksek Lisans, Elektrik Elektronik MühendisliğiBölümü

Tez Yöneticisi: Yar. Doç.Dr. Alparslan ÇağrıYapıcı

Ocak 2015, 33 sayfa

Bu tez çalışmasında, farklı sıcaklık ve güneş radyasyonu seviyelerinde, güneş paneli fotovoltaik (PV) güç üretim sistemlerinin verimini artırmak için Değiştir-Gözle (P&O) algoritması kullanılmıştır. Bu metot kullanılarak, sıcaklık ve güneş radyasyonu parametrelerinin benzetimleri ile PV dizisi cevabının analizleri yapılmıştır. Buna göre, akım ve voltaj değerleri, sıcaklık artışından olumsuz etkilenirken, güneş radyasyon seviyesinin artışından olumlu etkilenmektedir. Ayrıca görülmüştür ki, direnç artışı MPPT'yi aşağı çekmektedir. Bu çalışmada, MPPT ve DC-DC boost çevirici MATLAB yazılımı kullanılarak gerçekleştirilmiştir. Bunların yanı sıra FPGA için HDL kodu üretilmiştir.

AnahtarKelimeler: Maksimum güç noktası takibi, karıştırmayı ve gözlemlemek, Fotovoltaik sistemi, Güneş sistemi.

ACKNOWLEDGMENTS

I express sincere appreciation to my supervisor Assistant Prof. Dr. Alparslan Çağrı Yapıcıfor his guidance and insight throughout the research. To my parents, I offer sincere thanks for her continuous support and patience during this period.

GCRIS

TABLE OF CONTENTS

STATEMENT OF NON PLAGIARISM…… ii

ABSTRACT…… iii

ÖZ…… iv

ACKNOWLEDGEMENTS……. vi

TABLE OF CONTENTS…… vi

LIST OF FIGURES……..... vii

1. INTRODUCTION 1

1.1. Introduction 5

2. PHYSICS OF PHOTOVOLTAIC SYSTEM 4

2.1. Photovoltaic Effect 5

2.1.1. Photon Absorption 5

2.1.2. The PV Cell 6

2.2. Photovoltaic Model 8

2.3. Types of PV cell materials 9

2.4. PV cell modeling 9

3. SIMULINK MODEL OF PHOTOVOLTAIC SYSTEM 12

3.1. Circuit model and equations of photovoltaic cells 12

3.2. DC-DC Boost Converter 14

3.3. Maximum Power Point Tracking 16

3.3.1. Maximum Power Point Tracking Algorithm 20

3.4. MPPT Techniques 20

3.5. Perturb and Observe Algorithm 21

4. IMPLEMENTATION OF MPPT FOR PV SYSTEMS 24
4.1. System Overview 24
4.2. Generating VHDL code for FPGA 28
5. CONCLUSION 31
REFERENCES 31

GCRIS

LIST OF FIGURES

FIGURES

2.1 PV cell, Module and Array 4

2.2 Energy band diagram for semi conductor 5

2.3 P-N junction Band diagram..... 6

2.4 Perfect converts the photon energy into voltage across the p-n junction..... 7

2.5 Basic construction of PV cell with performance-enhancing features 7

2.6 Shows a short circuit conduction 10

2.7 Diagram showing open circuit conduction 10

2.8 Equivalent circuit of PV cell 11

3.1 Circuit model of PV 12

3.2 Subsystem model of PV 13

3.3 6 PV modules that connected in series..... 14

3.4 DC-DC boost converter..... 14

3.5 Matlab simulink model of Boost DC-DC boost converter 15

3.6 I-V curve for MPP illustration 16

3.7 P-V characteristic curve for 1000 w/m^2 17

3.8 PV modules that calculate the I-V characteristic curve and I-P..... 17

3.9 I-V curve varation with solar irradiation..... 18

3.10 Power output of a photovoltaic panel at different levels of solar irradiance 18

3.11 Plot of power vs. Voltage..... 22

3.12 Flow chart of Perturb and Observer algorithm 23

4.1 MATLAB SIMULINK model to observe the effect of variable irradiance..... 24

4.2 MPPT block 24

4.3 Flow chart of proposed Perturb and Observer algorithm..... 26

4.4 Reference current I_{ref}, (b) Output Power, (c) output of PV, (d) comparing between P_{out}, P_{PV} and P_{ideal} 27

4.5 Graph of efficiency, duty, PV output, I_{ref} and P_{out}, P_{pv}, P_{ideal} 28
4.6 Result for system on Modelsim simulator 29
4.7 Primary time and middle time of simulation..... 30

GCRIS

CHAPTER1
INTRODUCTION

1.1 INTRODUCTION

In recent years, the expansion of urban development due to the increase of population in the world is considered one of the important factors that increase energy demand. Therefore, the world is facing many challenges to solve the issue of energy. Nowadays, the conventional energy sources of nonrenewable energy like coal, gas, fossil fuels are decreased by the time due to high using. Moreover, these sources of energy increase the air pollutions and global warming. For this reason, it is important to find an alternative source of energy, which can be used instead of fossil fuels. The renewable energy or green energy is considered as alternative sources of power such as Geothermal Hydropower, Solar energy, Tidal power and Wave power. The solar photovoltaic (PV) system and wind power systems are found to be more suitable compared to other types of the renewable energy sources due to the desirable environmental and safety aspects. Therefore, solar energy has its own advantages which make it attract more attention in renewable filed [1]. These advantages are solar cells that have long life with little maintenance, high power capability and ease of implementation. In addition, there are several basic applications used by solar energy in the present day such as battery charging, water pumping, satellite power system and others.

Solar cell is considered as the basic element in solar photovoltaic system which is used to convert the sunlight into electrical energy [2]. The performance of the solar cell depends on the environment and the weather conditions such as temperature and irradiation of the sun. These factors are fluctuating in the nature. Under the effect of the normal conditions, the photovoltaic produces unique maximum operating point .Maximum efficiency at load can be achieved when solar PV operates in optimum points. In order to achieve high efficiency from the solar PV system, maximum power point tracking (MPPT) can be used to obtain high efficiency

MPPT charge control technique should be utilized as a part of conditioning system between the DC load and PV module [3]. MPPT is used to convert the incoming variable DC electrical energy from the solar PV into fixed DC and track the maximum power from the solar PV module. The maximum power point is fluctuating when the irradiation level and temperature are varied. For this reason, MPPT used to match the impedance between the load and the battery by changing duty cycle of the DC-DC converter.

In recent years, many MPPT techniques are proposed [4]. These techniques have different characteristics in performance from each other. Some methods can be listed as follow [5]: Perturb & observe method [13], Incremental conductance [10], Fuzzy logic control [11] and neural network [12].

The solar cell has an optimal point corresponding to the maximum power. The output power of the PV panel varies depending on the sunlight and the temperature. To obtain a maximum power of PV panels, the PV systems follows the Maximum Power Point (MPP) by analog or digital MPPT (Maximum Power Point Tracking) controllers [6-8]. In the case of analog MPPT control, raises the problem of the divergence and the size of electronic components used [7]. In the case of digital MPPT control several algorithms have been used in the literature [8,9]: the method of the incremental conductance (IC) [10], method of fuzzy logic (Fuzzy Logic Control) [11], based on neural networks (Neural Network) [12] and the traditional perturb and observe method (P&O) [13] which presents problems of precision on the regulation around the MPP.

Among all these methods Perturb &Observe methods are chosen to draw maximum power point from solar module [13]. Since simplicity in implementation and less size requirement, in this study basic algorithm of P&O is developed to obtain the same output with low complexity of circuit. In our work, solar PV module is modeled by Matlab Simulink.

In this study a PV module and DC-DC boost converter are implemented. In addition, the P&O algorithm with iterative process of MPPT controllers are implemented by using Simulink and ModelSim SE-64 10.1C software in digital domain in order to be used in FPGA. The designed system shows that P&O algorithm on FPGA can be used as MPPT controller for solar PV systems.

GCRIS

CHAPTER 2

PHYSICS OF PHOTOVOLTAIC SYSTEM

Photovoltaic (PV) technology is to convert sunlight directly into electricity. The word photovoltaic is a combination of two words. The word “photo” means light and “voltaic,” electricity. A photovoltaic (PV) cell is also known as solar cell. It is a semiconductor device that generates electricity when light falls on it. Although photovoltaic effect was found in 1839 by the French scientist Edmund Becquerel [14], it was not fully understandable until the development of quantum theory of light and solid state physics. Photovoltaic systems are designed with the photovoltaic cells. As a typical photovoltaic cell produces less than 3 watts at approximately 0.5 volt dc for high power application, cells are configured into modules and modules are connected as arrays. Modules may have peak output power ranging from a few watts to more than 300 watts. Mostly Photovoltaic array output power is from 100 watts to kilo watts range although megawatt array do exists [15]. These cell, module and array structures are shown in Figure 2.1. [15]

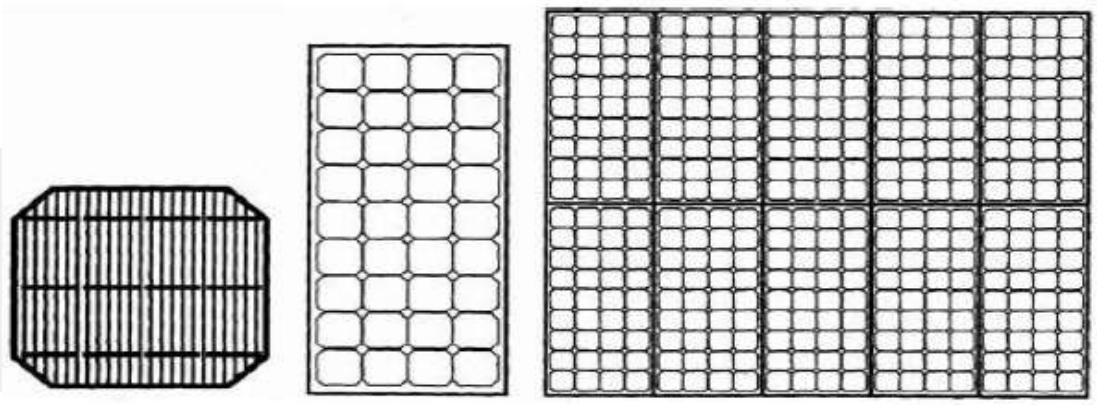

Cell Module Array

Figure 2.1. PV cell, Module and Array

2.1. Photovoltaic Effect

When light falls on a metal it either been reflected, transmitted or absorbed. The absorption of light is simply the conversion of the energy contained in the incident photon to some other form of energy, typically heat. However some materials have properties to convert the energy of the incident photons to electricity [16]. When photon energy is absorbed it interacts with atoms of the absorbing material suchas giving off its energy to an electron in the material. This energy transfer is happened according to the rule of conservation of momentum and conservation of energy. Depending on the energy of the photon, an electron may be raised to higher energy state within an atom or it may be liberated from the atom. Free electrons are then capable of moving through the crystal.

2.1.1. Photon Absorption

In photovoltaic energy conversion, we look for converting solar energy into electricity. This works on the principle of the p-n junction basis. If a semiconductor material such as silicon (Si) is doped with group 3th or 5th impurities (Ph, Br), the electron hole balance changes as below: doped with phosphorous impurity (Excess Holes) P-type and doped with boron impurity (Excess Electrons) N-type.The Fermi level usually depicts the actions of such a material, as electrons conduct in the conduction band, while holes conduct in the valance band.

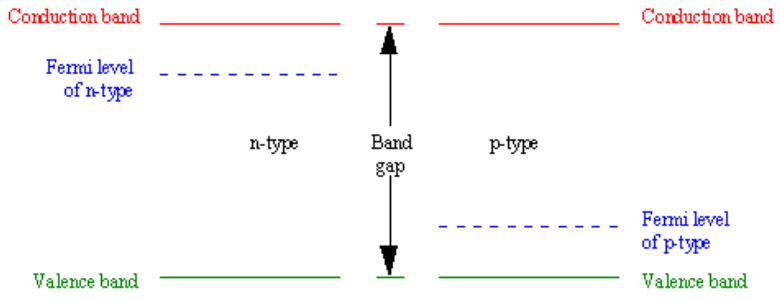

Figure 2.2.Energy band diagram for semi-conductor.

This has been shown in the figure (2.2). In the p- type semiconductor, the Fermi level is closer to the valance band, while in the n-type material the Fermi level is closer to the conduction band.

If a p-type semiconductor is joined with an n-type semiconductor, a p-n junction material is formed as seen in Figure 2.3. Due to the opposite variation experienced in both, the Fermi level becomes equal and balanced in the middle.

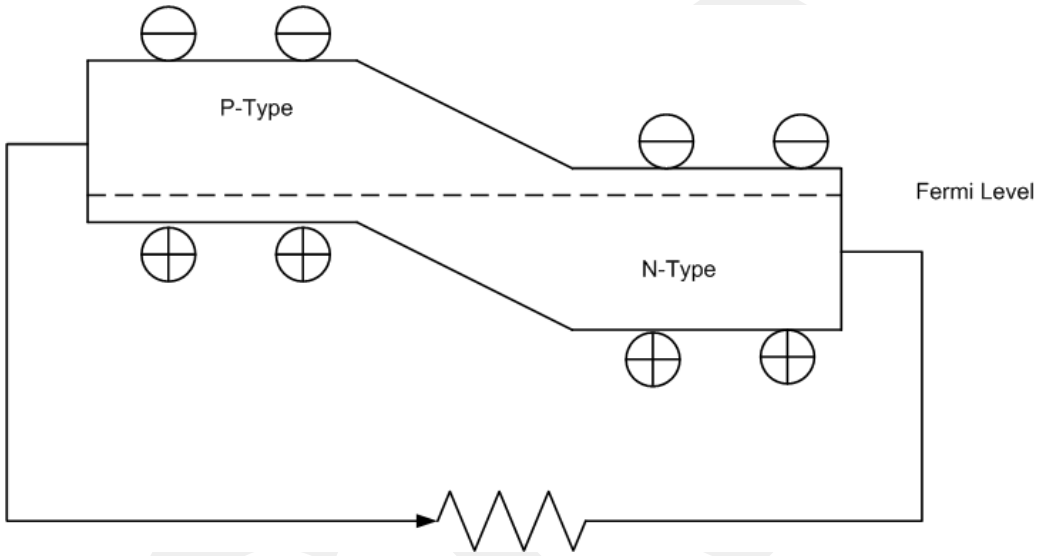

Figure 2.3.p-n junction Band diagram

Due to this phenomenon the electrons find it difficult to go up the band hill and holes find it difficult to go down the band hole.

2.1.2. The PV Cell

In a photovoltaic cell, when light is incident and if this light energy is greater than the band gap energy (Fermi level); electrons will absorb this energy and move from their positions, thus making it free and holes are created in its place. The free moving electrons will flow downhill, while the holes go uphill. This will be the consequence of a large concentration of electrons on the n-side and a large concentration of holes on p-side. These charges can be extracted and made the current flow in the system by connecting it as shown in the Figure 2.4. Also basic construction of PV cell with performance-enhancing features such as, current

collecting silver mesh, antireflective coating, and cover-glass protection is illustrated in Figure 2.5 [17].

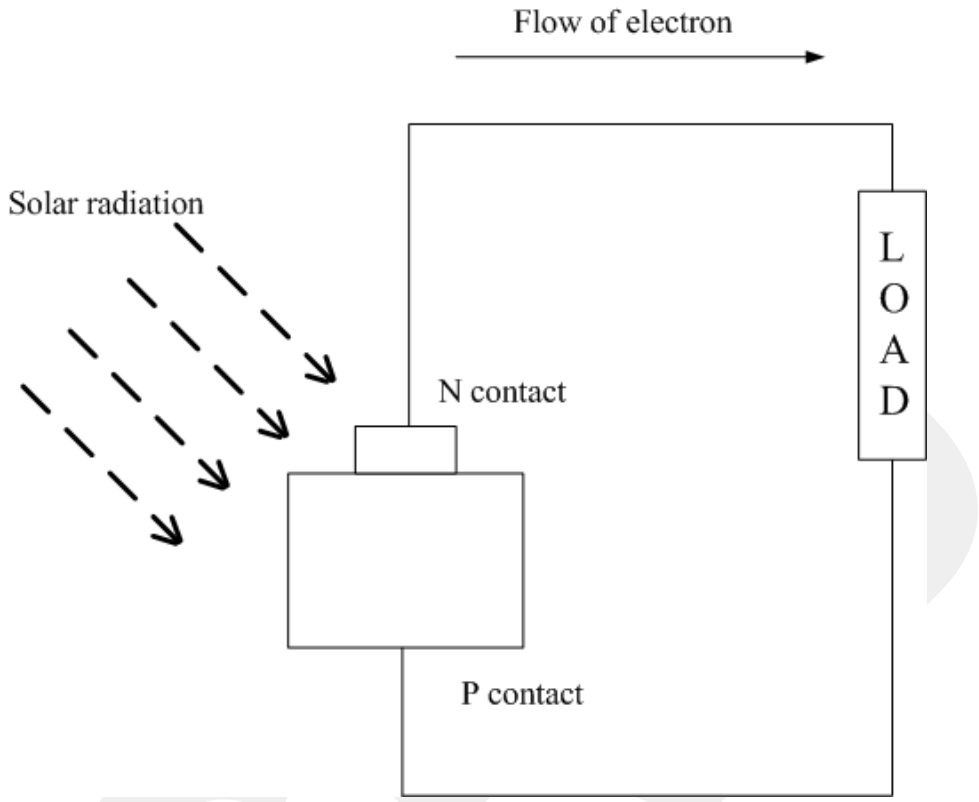

Figure 2.4 Perfect converts the photon energy into voltage across the p-n junction.

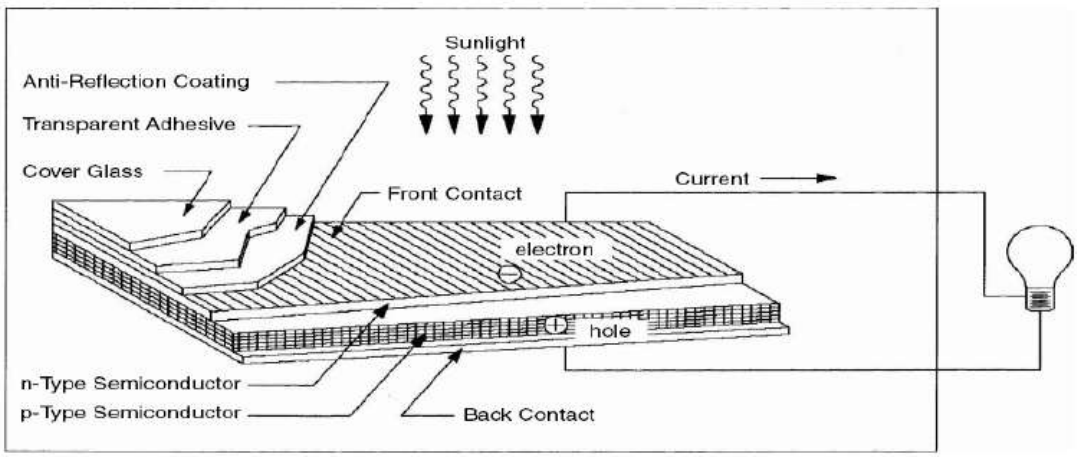

Figure 2.5. Basic construction of PV cell with performance-enhancing features [17].

Metallic wires are provided on both sides of the junction to collect electrical current induced by the photons. A thin conducting mesh of silver fibers placed on the top surface collects the current and lets the light passing through it. In addition to the basic elements, several enhancement features are also included in the construction. For example, the front face of the cell has an antireflective coating to absorb as much light as possible by minimizing the reflection.

The mechanical protection is provided by a cover glass. As long as there is light flowing into the cells, there are electrons flowing out of the cells. The cell never use up its electrons and loose power, like a battery. It is work as converter by changing one kind of energy to another. For every electron that flows out the wire connected, there is another electron flowing into the back from the other return wire. The cell is a part of a circuit, where the same electrons just travel around the same path, getting energy from the sunlight and giving that energy to the load.

2.2. Photovoltaic Model

Complete Photovoltaic system consists of two elements. One is a module, which contains solar cells, and the other is the "Balance-of-System" (BoS). The BoS mainly consists of electronic components like converter, inverter, cabling, support structures, electricity storage and sun trackers.

Two major types of PV systems are available in the market place today: Flat plate and Concentrators. As the most prevalent type of PV systems, flat plate systems build the PV modules on a rigid and flat surface to capture sunlight. Concentrator systems use lenses to concentrate sunlight on the PV cells and increase the cell power output. Comparing the two systems, flat plate systems are typically less convoluted but needs a larger number of cells while the concentrator systems use smaller areas of cells but require more sophisticated and expensive tracking systems. The concentrator system is unable to focus on diffuse sunlight so this system does not work under cloudy conditions.

2.3. Types of PV cell materials

PV cells are made of semiconductor materials. The major types of materials are crystalline and thin films, which vary from each other according to the efficiency of light absorption and energy conversion, manufacturing technology and cost of production [18].

The types of PV cells are can be represented as follows:

a. Crystalline Materials

1. Single-crystal silicon
2. Polycrystalline silicon
3. Gallium Arsenide (GaAs)

b. Thin Film Materials

1. Amorphous Silicon (a-Si)
2. Cadmium Telluride (CdTe)
3. Copper Indium (CuInSe2, or CIS)

Crystalline silicon has been most commonly used for the PV cells for the past two decades. However, recent progress in the thin-films technology has led many industry experts to believe that thin-films PV cells will ultimately dominate the marketplace.

2.4. PV cell modeling

The use of equivalent circuits makes it achievable to model characteristics of a PV cell. The method is implemented in MATLAB software. For modeling a PV module, the same modeling technique is also applicable. Which is used for a cell.

Two key parameters often used to characterize a PV cell and they are short-circuit current and open circuit voltage.

If the terminals of the cell are shorting together, the photon generated current (I_{ph}) will flow out of the cell as a short-circuit current (I_{sc}) which is shown in figure 2.6 Thus, $I_{ph} = I_{sc}$, when there is no connection to the PV cell (open-circuit) which is shown in figure 2.7, the photo generated current is shunted by the internal intrinsic p-n junction diode. This gives the open circuit voltage, V_{oc}. The PV module or cell manufacturers usually provide the values of these parameters in their datasheets [19].

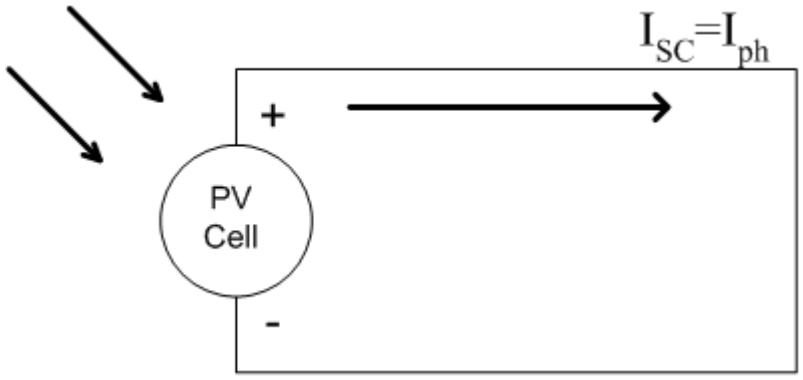

Figure 2.6.Showsa short circuit conduction.

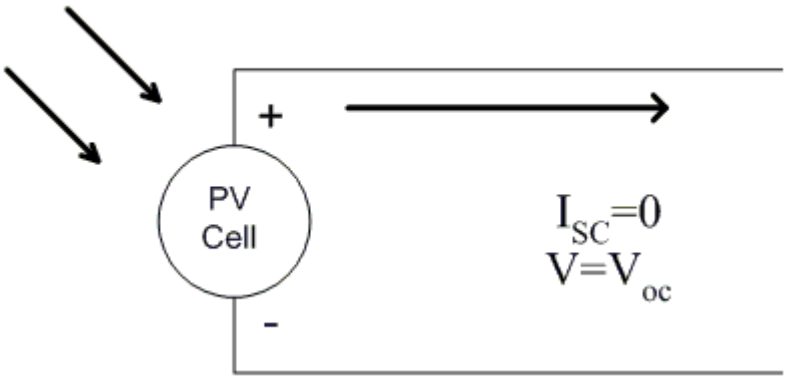

Figure 2.7 Diagram showing open circuit conduction.

The design of PV is modeled as a current source in parallel with a diode. When there is no light present to produce any current and the PV cell behaves like a diode. By applying the Kirchhoff's current law on the equivalent circuit shown in Figure 2.8 the output current I of the PV cell is as below,

$$I = I_{sc} - I_d \tag{2.1}$$

I_{sc} is the short circuit current and I_d is the current shunted through the diode.

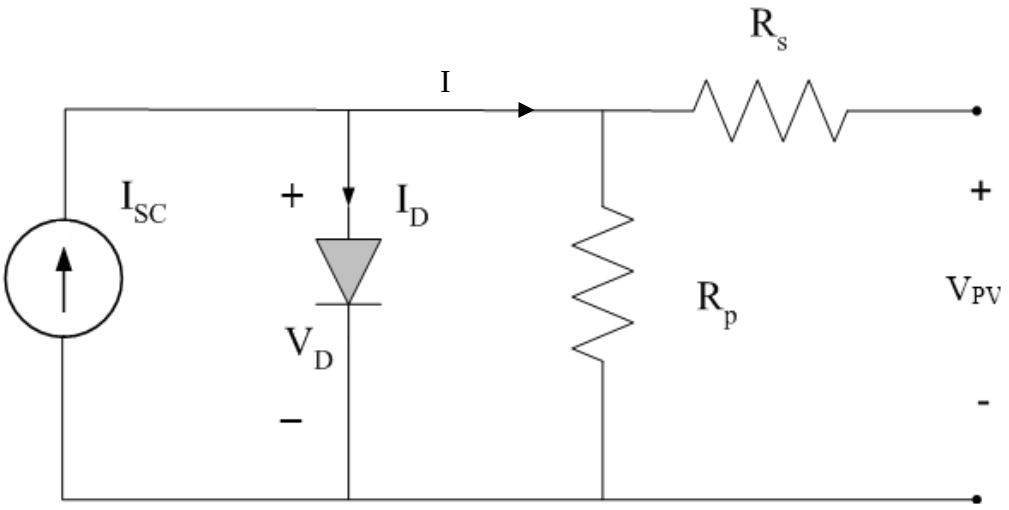

Figure 2.8.Equivalent circuit of PV cell.

The diode current I_d is given by the Shockley diode equation [20]:

$$I_d = I_o(e^{qV_d/kT} - 1) \tag{2.2}$$

Here, T , I_o , q , V_d and K are the junction temperature in Kelvin K , the reverse saturation current of diode, the electron charge ($1.602*10^{-19}$ C), the voltage across the diode and the Boltzmann's constant (1.381*10-23 J/K), respectively. R_s is series resistance

Replacing I_d of the equation (2.1) by the equation (2.2) gives the Current–Voltage relationship of the PV cell; this equation is shown in (2.3)

$$I = I_{sc} - I_o(e^{qV_d/kT} - 1) \tag{2.3}$$

CHAPTER 3

SIMULINK MODEL OF PHOTOVOLTAIC SYSTEM

3.1. Circuit model and equations of photovoltaic cells

Circuit model of PV is shown in Figure 3.1.

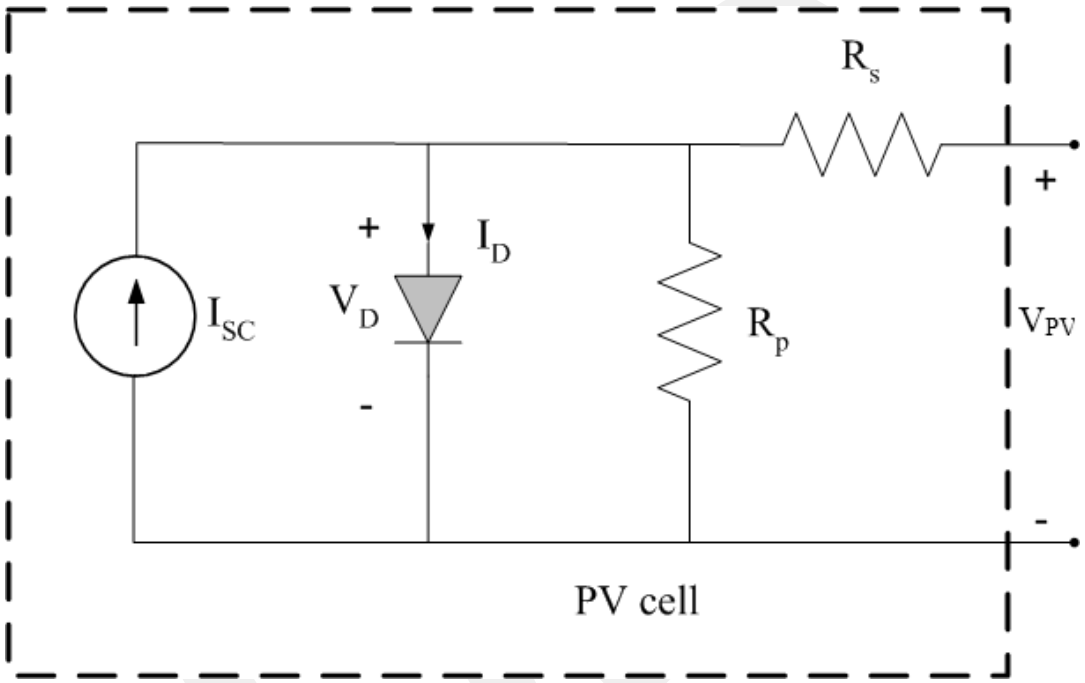

Figure 3.1. Circuit model of PV

For this circuit, if it is applied the Kirchhoff's current law, short circuit current can be written as:

$$I_{SC} - I_D - \frac{V_D}{R_P} - I = 0 \tag{3.1}$$

whereR_p is the shunt resistance, and I_{pv} is the photovoltaic current. The characteristic of current for diode is:

$$I_D = I_o(e^{V_D/V_T} - 1) \tag{3.2}$$

similarly we can apply Kirchhoff's voltage Law. Then PV cell voltage can be written as:

$$V_{PVcell} = V_D - R_s I \tag{3.3}$$

Where, R_s is the series resistance. Thus the voltage of PV is:

$$V_{PV} = N_s V_{PVcell} \tag{3.4}$$

Where N_s is the number of cells in series.

Simulink model of PV module based on PV cell model is shown in Figure 3.2.

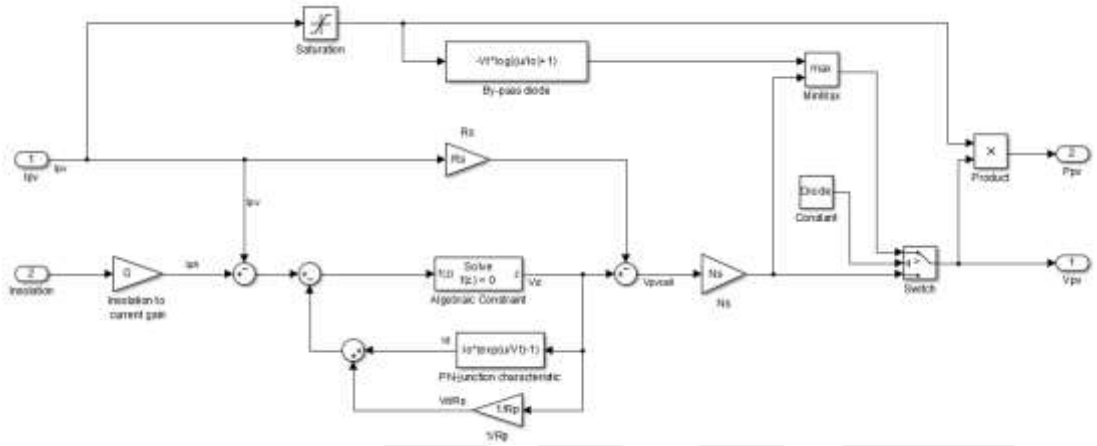

Figure 3.2.Subsystem model of PV in Simulink

In this model short circuit current has been chosen as 5.45 (A),and open circuit voltage has been chosen as 22.2 (V).

If we use forward biasing then the bypass diode voltage is

$$V_{Dbypass} = V_t \ln(\frac{I_{bypass}}{I_o} + 1) \tag{3.5}$$

In this study 6 PV modules are used in series form which is .shown in Figure 3.3.

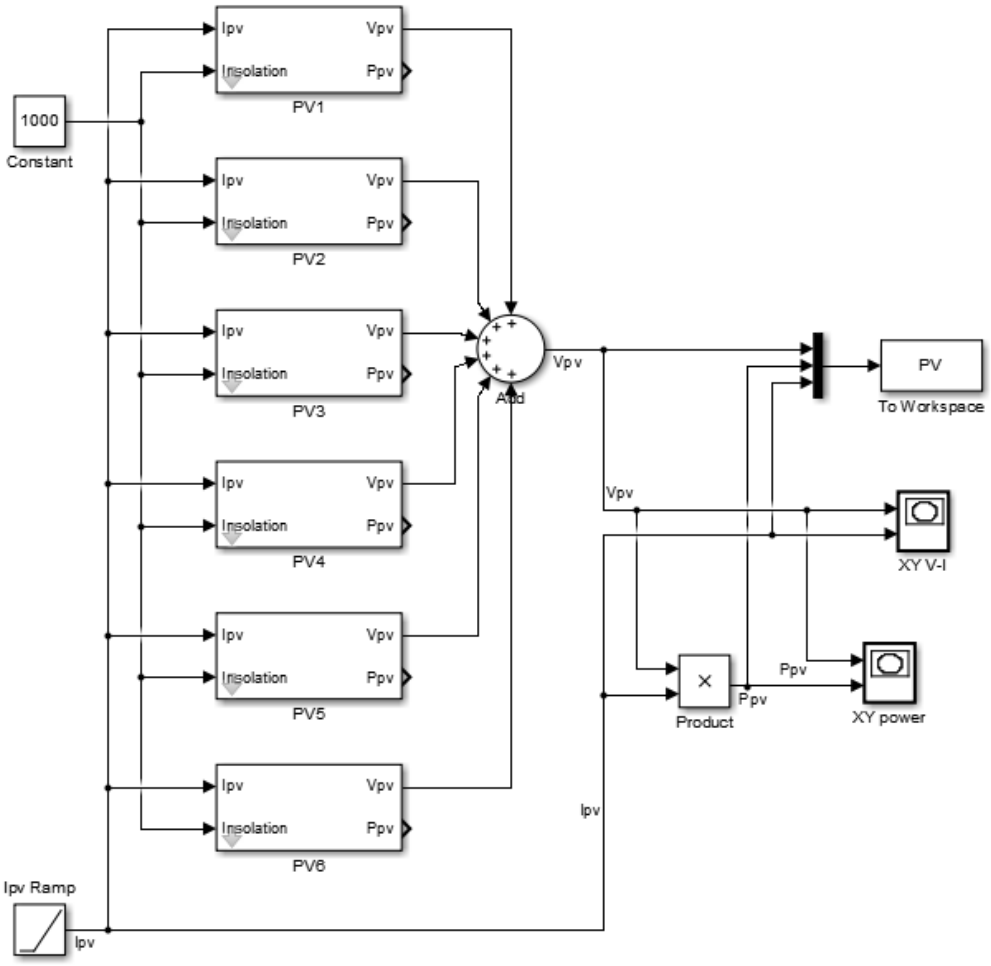

Figure 3.3. 6 PV modules that connected in series

3.2. DC-DC Boost Converter

DC-DC boost converter steps up the PV voltage. It boosts up the voltage with respect to change of duty cycle of pulse generator. In this thesis the DC-DC boost converter shown in Figure 3.4is used

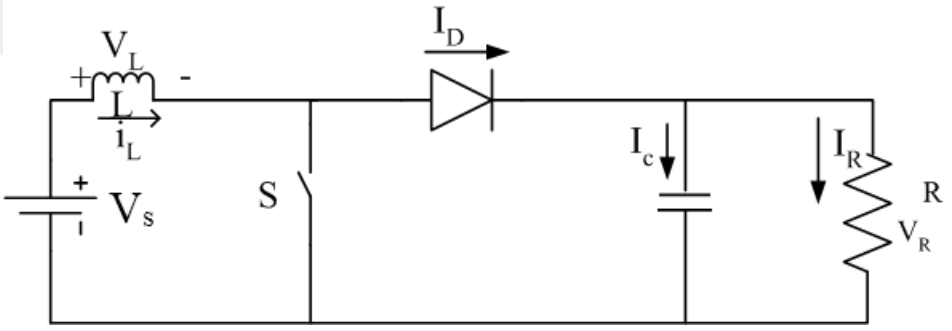

Figure 3.4. DC-DC boost converter

Also the Simulink model of DC-DC boost converter is shown in Figure 3.5.

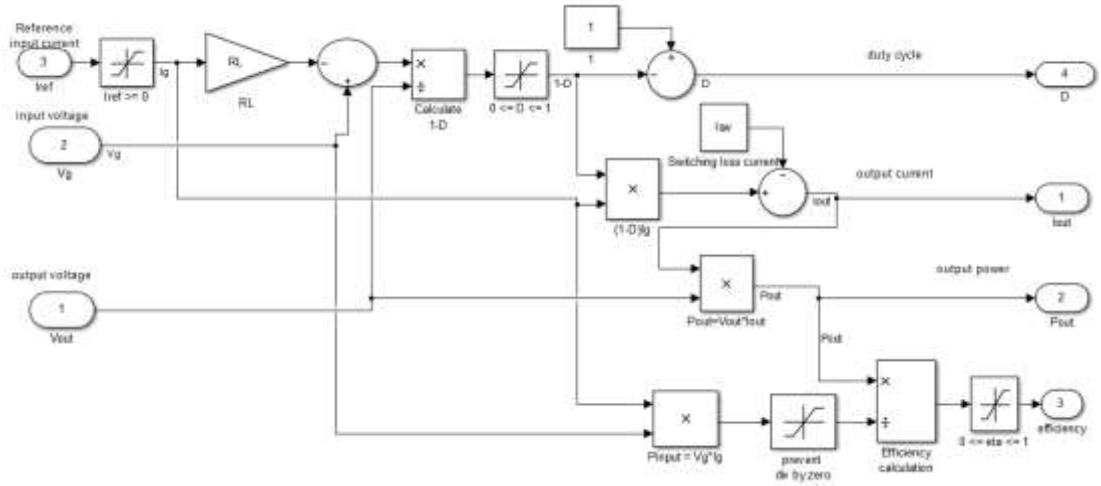

Figure 3.5.MatlabSimulink model of DC-DC boost converter

The boost DC-DC boost converter allows operation of the panel at its maximum power point thus resulting in maximum power transfer from solar input to the electrical output. For the boost converter following equations are considered:

V_g represents input voltag in fig 3.5

$$\frac{V_o}{V_{in}} = \frac{1}{1-D} \tag{3.6}$$

$$V_o = V_{in} * \frac{1}{(1-D)} \tag{3.7}$$

$$D = \frac{V_o - V_{in}}{V_o} \tag{3.8}$$

$$I_o = I_{in} * (1-D) \tag{3.9}$$

$$P = V_o * I_o \tag{3.10}$$

here, D, I_{in}, I_o, V_{in}, V_o and P are the duty cycle, the input current , the output current, the input voltage, the output voltage and the output power respectively. For DC-DC step up converter, output voltage increases if duty cycle of pulse wide modulator (PWM) increases. To step up the input voltage two times higher, duty cycle required to be fixed at 50%.

3.3. Maximum Power Point Tracking

A PV module can produce the power at a point, called as operating point, which is on the I-V curve. There is a unique point near knee of the I-V curve, called as maximum power point (MPP) at which the module operates with the maximum efficiency and produces the maximum output power. After simulate this model we get the I-V characteristic curve and I-P characteristic curve for 1000 w/m^2. This state is illustrated in Figure 3.6 and 3.7. This figure is result for figure 3.3.

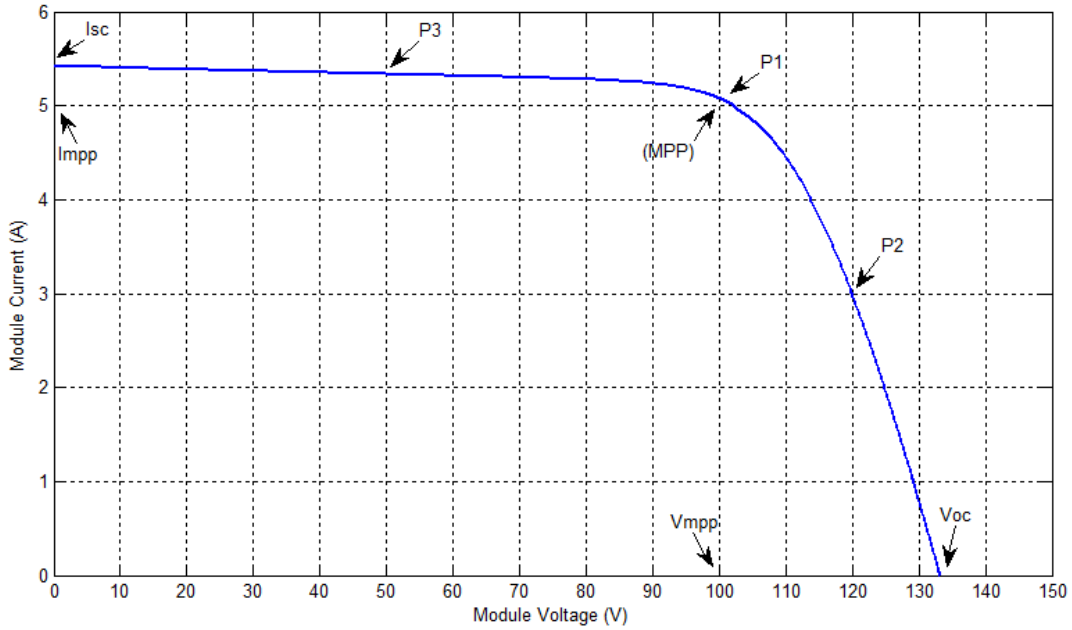

Figure 3.6. I-V curve for MPP illustration

In this Figure, we used 6 PV, therefore our V_{oc} will be 6*22.2(V). Also I_{sc} is 5.5(A). The points show the value of power and current in P_2 the value of current as seen is 3 (A) and voltage is 120 (V), thus power is P=VI = 360 (W). Also in P_1 the value of current I_{mpp} as seen is 5 (A) and voltage is V_{mpp}=100 (V), thus power is $P_{mpp}=V_{mpp}I_{mpp}$= 500 (W). In P_3 the value of current I as seen is 5.35 (A) and voltage is V=50 (V), thus power is P=VI= 267.5 (W). Therefor the maximum value for power is get 500 (W) in point of P_1.

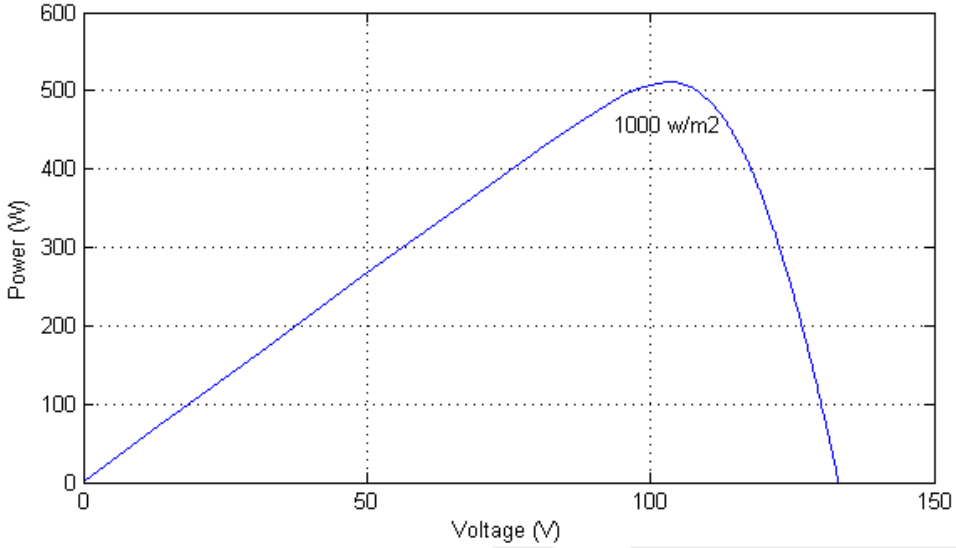

Figurer 3.7.P-V characteristic curve 1000 w/m^2.

For different values of irradiance with respect to surface [200, 400, 600, 800 and 1000 W/m2] analysis is carried out by using the MATLAB-SIMULINK model shown in Figure 3.8.

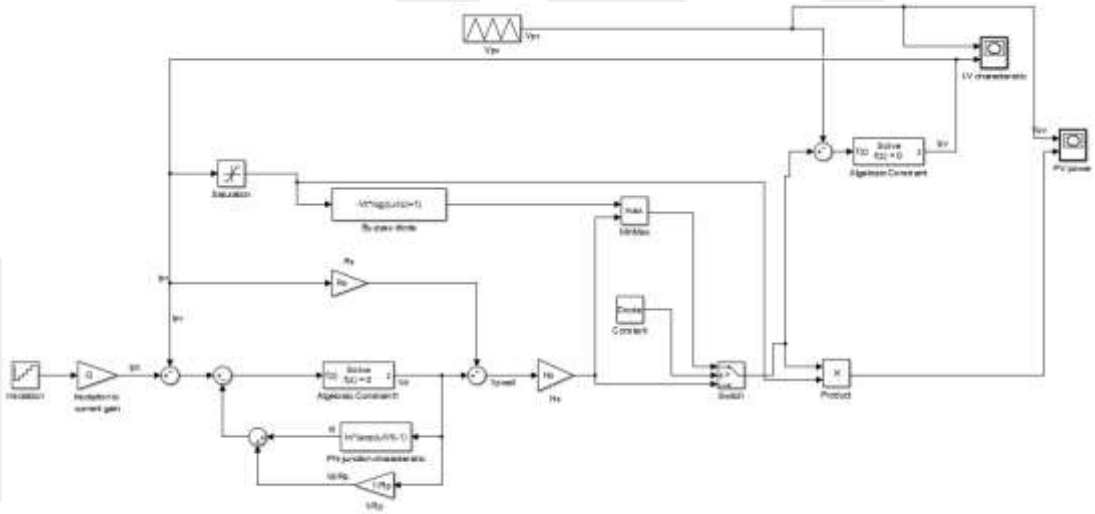

Figure 3.8. PV modules

This figure shows the calculating of I-V characteristic curve and I-P characteristic curve for different value of irradiance levels.

After simulation the I-V characteristic curve and I-P characteristic curve for different value of irradiance. This results are shown in Figure 3.9 and 3.10.

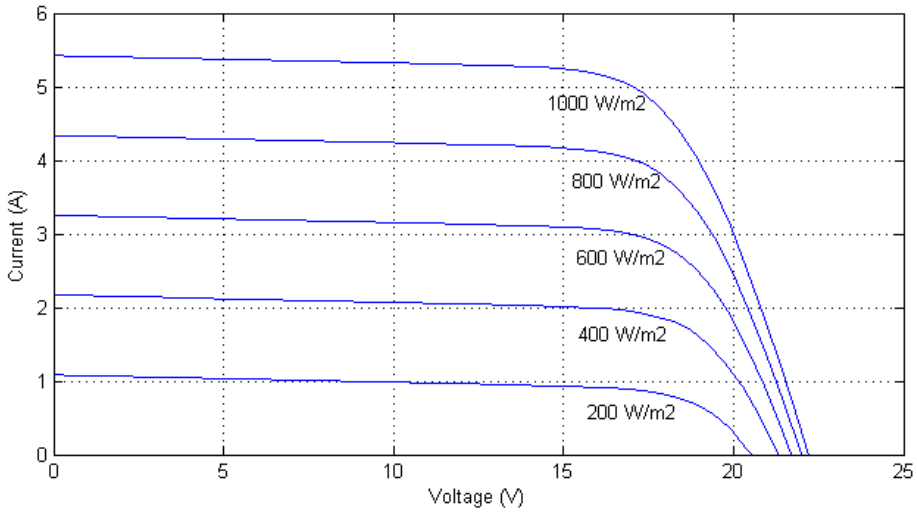

Figure 3.9. I-V curve variation with solar irradiation

It is seen from Figure 3.9 that the output current of a typical PV panel varies with solar insulation proportionally.

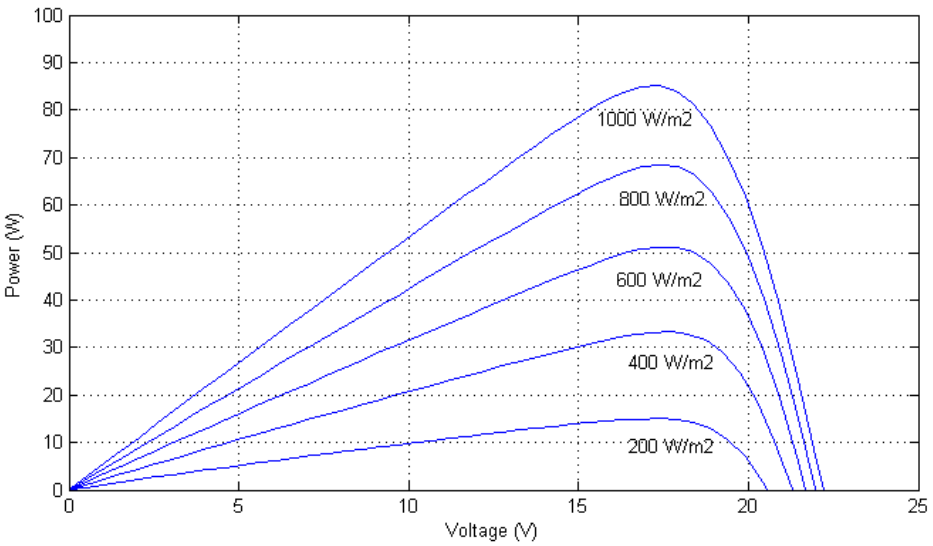

Figure 3.10. Power output of a photovoltaic panel at different levels of solar irradiance

The solar energy obtained from the PV panels must be stored in order to use this energy when the solar energy is not available. For storage of solar energy rechargeable batteries are used. These storage batteries must be as efficient as

possible and have a low leakage current. The capacity of the batteries is determined according to maximum power which can be extracted from the panel in a day.

In the simulation cell temperature is considered as 25°C. For getting the maximum electrical power output from a photovoltaic panel, the load resistance should match pick point. As can be seen on Figure 3.10, the load resistance must increase as solar irradiance decreases in order to maintain maximum power output from the panel. Since the resistance of most electrical loads is fixed, special consideration must be taken in the system design to ensure that the maximum potential of the solar panel is utilized.

Here the output voltage will fluctuate near the maximum output voltage (17.5V) in order to get the maximum power with the corresponding irradiance changes (200, 400, 600, 800, 1000 w/m2). The pick point of curve shows the maximum power points. PV system is most sensitive to the variation of sudden irradiation fall or rise. System may be completely collapsed on the situation of over or under voltage.

In order to achieve the Maximum output power point of PV module, the P&O algorithms are used. By using boost converter the voltage has been stepped up two times higher than the PV output voltage. This is the maximum output voltage range for the selected PV module for different solar irradiance.

Here the PV panel composed which typical 60W PV modules. Its main specifications are shown in Table 1.

Table 1. Electrical characteristics of PV panel for different level of irradiance.

Symbol	Quantity	Value
T_{oc}	Temperature coefficient of V_{OC}	-(70±10) mV/°C
P_{MPP}	Maximum Power Point	60 W
T_{sc}	Temperature coefficient of I_{SC}	(0.075±0.010)%/°C
V_{MPP}	Voltage at P_{MPP}	17.2 V
V_{ov}	Open-Circuit Voltage	22.2 V
I_{MPP}	Voltage at IMPP	4.95 A
I_{sc}	Short-Circuit Current	5.45 A

3.3.1. Maximum Power Point Tracking Algorithm

The power output characteristics of the photovoltaic system as functions of light irradiation and temperature curves are nonlinear and influenced by the effect of temperature and solar irradiation. For this reason, the efficiency in PV solar system is very low due to the PV module which gives very low efficiency. In order to solve this issue in solar cell, maximum power point tracking (MPPT) is used. This technique used to get maximum possible power from solar PV system. In other meaning, MPPT is a device which tries to match the impedance of PV system with battery to get the maximum power. There are many methods of MPPT controller which can be listed below:

- Perturb and observe method.
- Incremental Conductance.
- Parasitic Capacitance method.
- Constant Voltage Method.
- Constant Current method.

3.4. MPPT Techniques

There are several MPPT techniques have been proposed in literature [4]. Some of these are given such as, Incremental conductance, Fractional short circuit current, Ripple correlation control, Current sweep, DC link capacitor droop control, Load current or load voltage maximization, dP/dV or dP/dI Feedback Control, Fuzzy Logic Control, Neural Network Control [11, 12].

Many MPPT techniques have been proposed in the literature [4]. These techniques vary in complexity, sensors required, convergence speed, cost, range of effectiveness, implementation hardware, popularity, and in other respects. Table 3.2 shows comparison of the most known MPPT techniques [4].

Table 3.2. Comparison of the MPPT Techniques

MPPT technique	**PV array Dependent ?**	**True MPPT ?**	**Analog or Digital ?**	**Periodic tuning**	**Convergence Speed**	**Implementation complexity**	**Sensed parameters**
P&O	No	Yes	Both	No	Varies	Low	V,I
IncCond	No	Yes	Digital	No	Varies	Medium	V,I
Fractional *VOC*	Yes	No	Both	Yes	Medium	Low	V
Fractional *ISC*	Yes	No	Both	Yes	Medium	Medium	I
Fuzzy Control	Yes	Yes	Digital	Yes	Fast	High	Varies
Neural Network	Yes	Yes	Digital	Yes	Fast	High	Varies
RCC	No	Yes	Analog	No	Fast	Low	V,I
Current Sweep	Yes	Yes	Digital	Yes	Slow	High	V,I
DC Link Cap.	No	No	Both	No	Medium	Low	V
Load I or V Max.	No	No	Analog	No	Fast	Low	V,I
dP/*dV*Feedback	No	Yes	Digital	No	Fast	Medium	V,I

3.5. Perturb and Observe Algorithm

The Perturb & Observe (P&O) algorithm is widely accepted and usually used in practice because of its simplicity in algorithm and the ease of implementation. It is also known as the hill climbing method. Figure 3.11 shows output power-voltage curve (P-V curve) of a PV module, at the constant irradiance and the constant module temperature, assuming the PV module is operating at a point which is away from the MPP (point A or B).

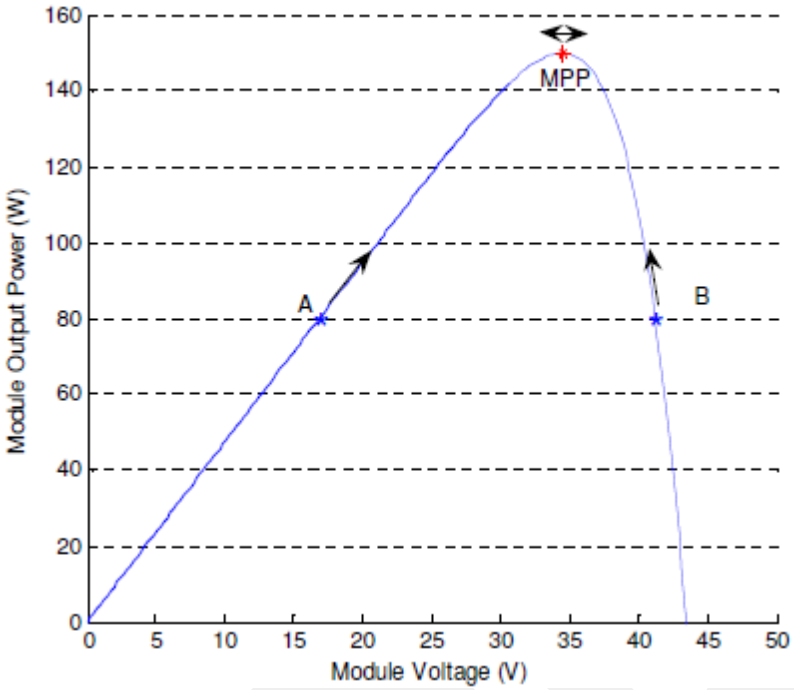

Figure 3.11. Plot of power vs. voltage

In this algorithm the operating voltage of the PV module is perturbed by a small increment; therefore, change of power, ΔP, is observed. If the ΔP is positive then it is supposed that it has moved to the operating point closer to the MPP. Thus, further voltage perturbations in the same direction should move the operating point toward the MPP. If the ΔP is negative, the operating point has moved away from the MPP, and the direction of perturbation should be reversed to move back toward the MPP. Figure 3.12 shows the flowchart of this algorithm [21].

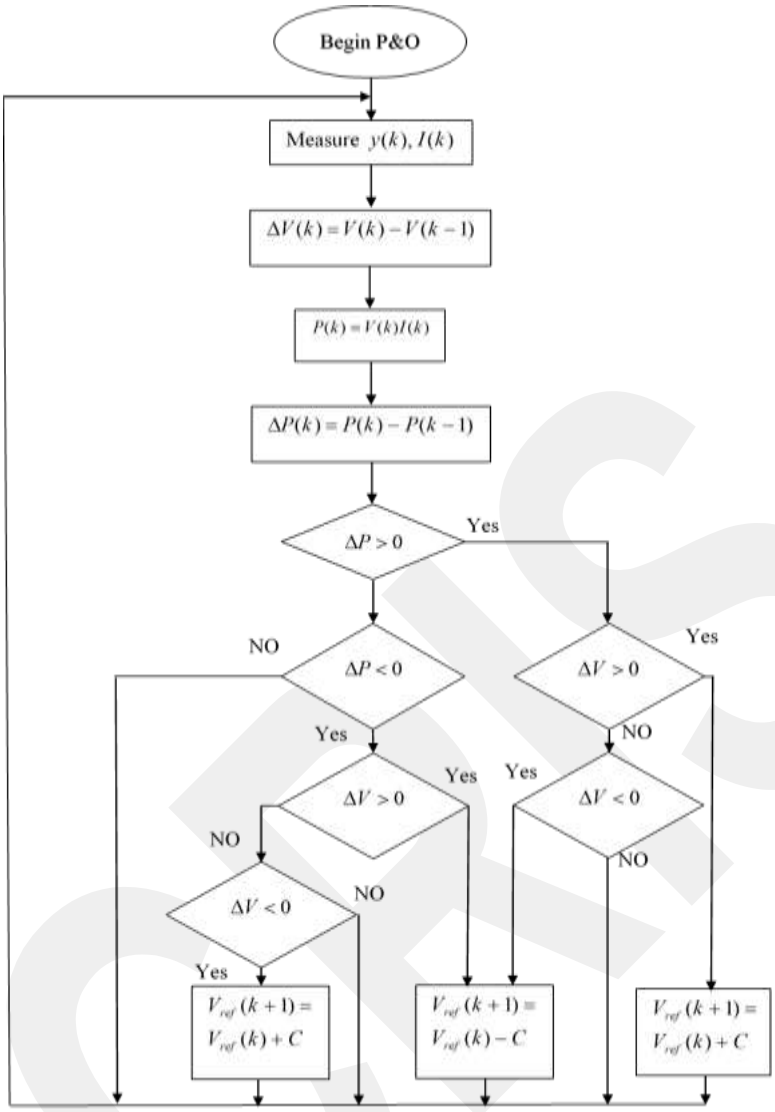

Figure 3.12.Flow chart of Perturb and Observer algorithm.

With respect to P&O algorithm, measured cell characteristics (current, voltage, and power) are employed along with an online search algorithm to compute the corresponding MPP, independent of insolation, temperature, or degradation levels. Problems with this approach are oscillation of operating point around the MPP, undesirable measurement errors (especially for current), which strongly affect tracker accuracy.

CHAPTER 4

IMPLEMENTATION OF MPPT FOR PV SYSTEMS

4.1. System Overview

MPPT is implemented in MATLAB-SIMULINK and verified. The simulated system consists of six PV model, DC-DC boost converter, and MPPT controller. The MATLAB–SIMULINK model to observe the effect of variable irradiance is shown in Figure 4.1.

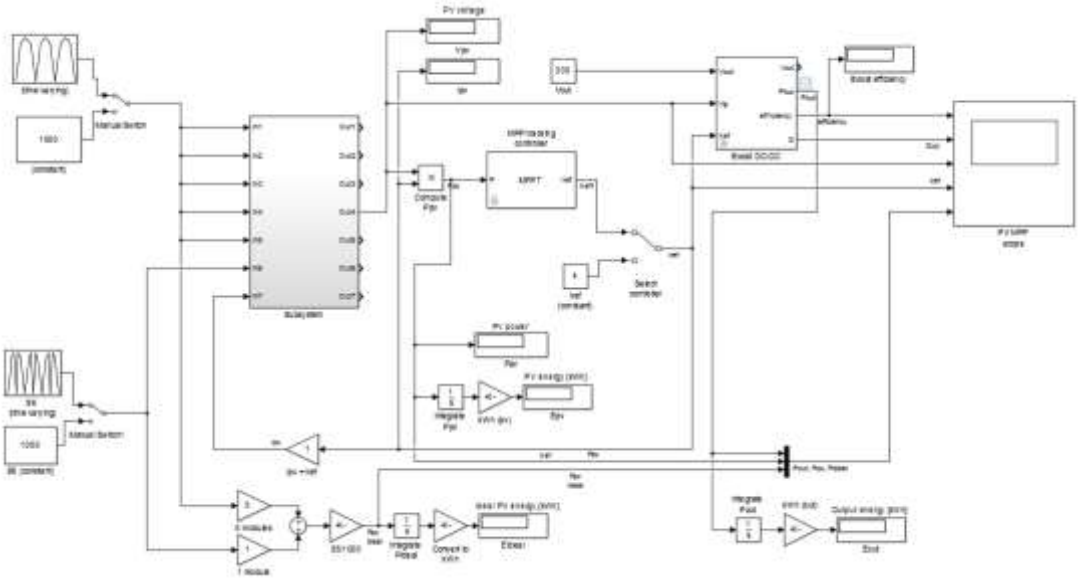

Figure 4.1. MATLAB SIMULINK model to observe the effect of variable irradiance

This model is illustrated the data with variation of time on PV output power using MPPT algorithm. MPPT block is shown in figure 4.2.

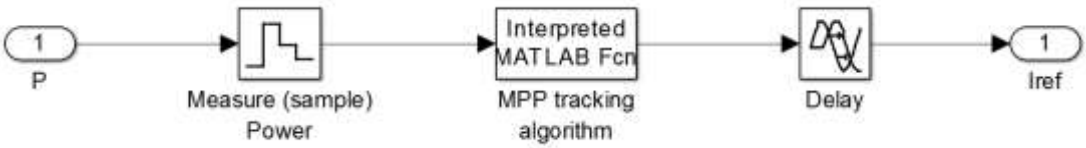

Figure 4.2. MPPT block

The function of MPPT algorithm, calculates the module current (I_{PV}) for the given module voltage (V_{PV}), irradiance (G in kW/m2), and module temperature (T in °C).

The operating point of PV module is located by its relationship to the load resistance (R).

$$R_{operating} = \frac{V_{pv}}{I_{pv}} \tag{4.1}$$

The irradiance (G) and the module temperature (T) for the MPPT tracking function are known variables, thus it is possible to say that I_{PV} is the function of V_{PV} thereby

$$I_{pv} = f(V_{pv}) \tag{4.2}$$

Substituting equation (4.2) into the Equation (4.1) gives:

$$V_{pv} - R_{operating} * f(V_{pv}) = 0 \tag{4.3}$$

Knowing the value of $R_{operating}$ enables to solve this equation for the operating voltage (*VPV*).

Each sampling of voltage and current is done at a periodic steady state condition of the converter. Therefore, the steady state analysis provides sufficient modeling of the DC-DC boost converter. The following equations describe the input/output relationship of voltage and current, and they are used in the MATLAB simulation.

$$V_0 = \frac{D}{1-D} V_i \,, \quad I_0 = \frac{1-D}{D} I_i \tag{4.4}$$

where D is the duty cycle of the DC-DC boost converter. The following flowchart, shown in Figure 4.3, explains the simulation of the MPPT system.

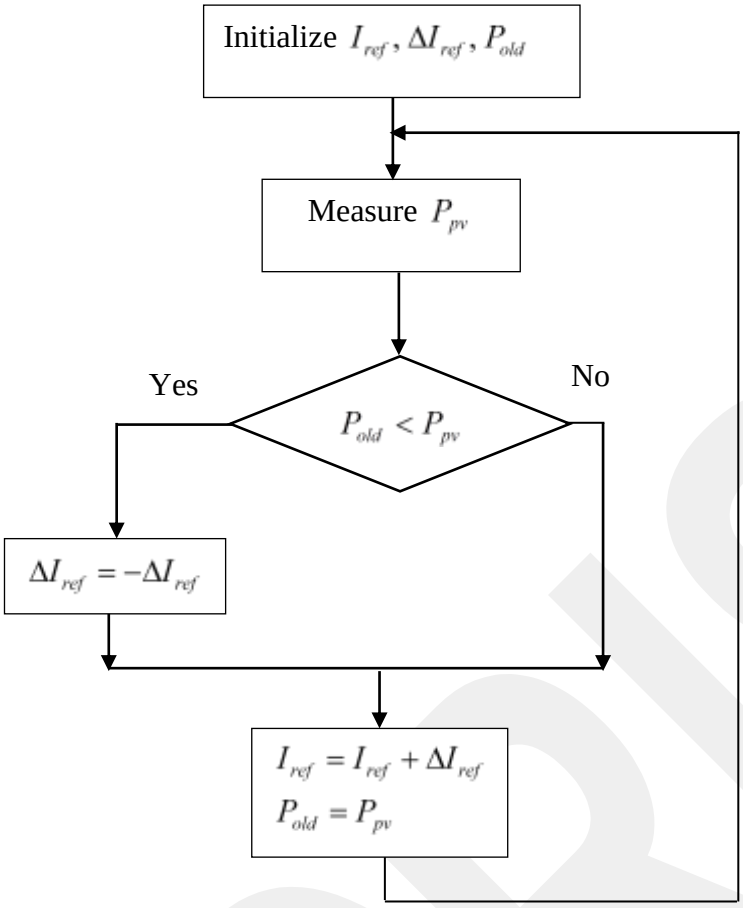

Figure 4.3.Flow chart of proposed Perturb and Observer algorithm.

From the above simulation model, the effect of variable irradiance data with the variation of time on three series PV module has been observed where Maximum Power Point Tracking algorithm has been used to keep the DC output of DC/DC boost converter at 200V. For this reason the duty cycle of the DC/DC boost converter has been changed with the change of PV output voltage.

Here, previously described P&O algorithm is used for Maximum Power Tracking. The only difference is instead of V_{pv} (PV module voltage), I_{pv} (PV module current) has been adjusted to (reference current) to get maximum output from PV array at different irradiance level. Figure 4.4 (a) shows the I_{ref}. The output power of DC-DC converter is shown in Figure 4.4 (b).We can also observe from the above figures that the total output power has changed with different irradiation level. Figure 4.4-(c)

shows the out of power of the system. The comparison of powers is shown in Figure 4.4-(d).

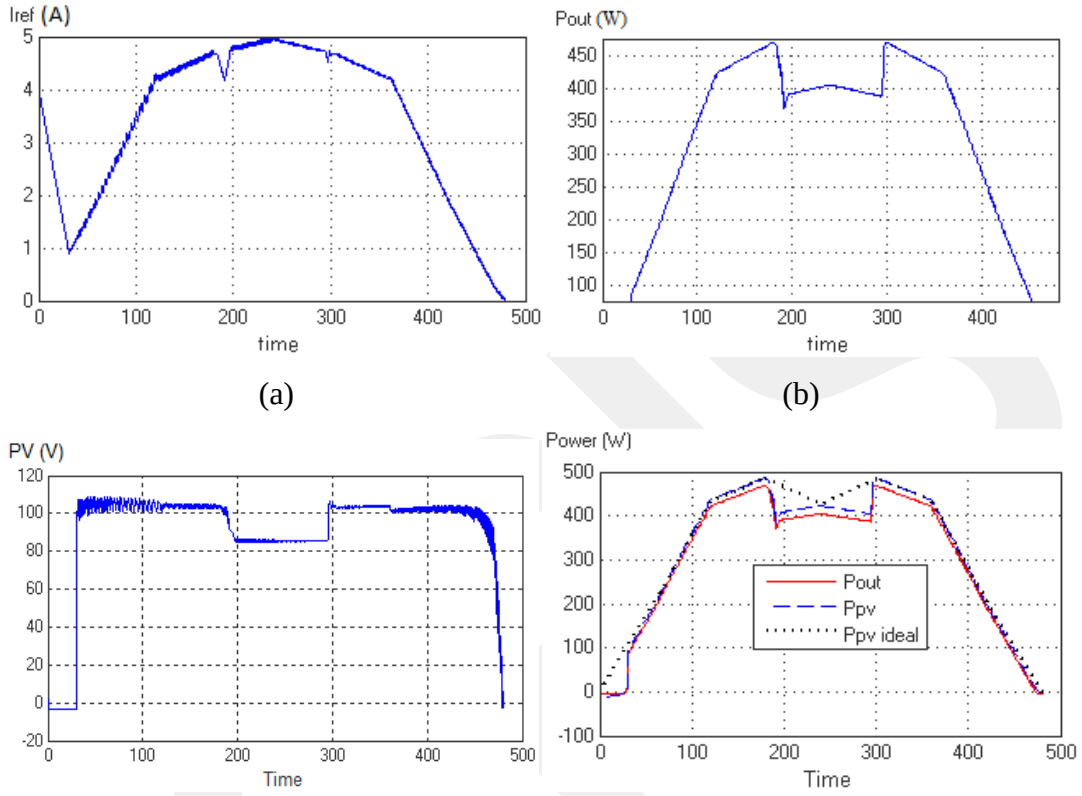

Figure 4.4. (a) Reference current I_{ref}, (b) Output Power, (c) output of PV, (d) comparing between P_{out}, P_{PV} and P_{ideal}.

The parameters are standard PV module parameters: short-circuit current I_{sc}, open circuit voltage V_{oc}, Rated current I_R at maximum power point (MPP), and rated voltage V_R at MPP. Temperature effects are not modeled.

Figure 4.5 illustrate the graph of efficiency, duty, PV output, I_{ref} and P_{out}, P_{pv}, P_{ideal}, at [0 400 850 950 1000 950 850 400 0] W/m2.

Figure 4.5 Graph of efficiency, duty, PV output, I_{ref} and P_{out}, P_{pv}, P_{ideal}, at different level insolation (without specific range).

This figure is without the auto scale. For efficiency, this figure show between 0.936 and 0.968. if we want to show between 0 and 1 we must to put in specific range. After auto scale we get Figure 4.6.

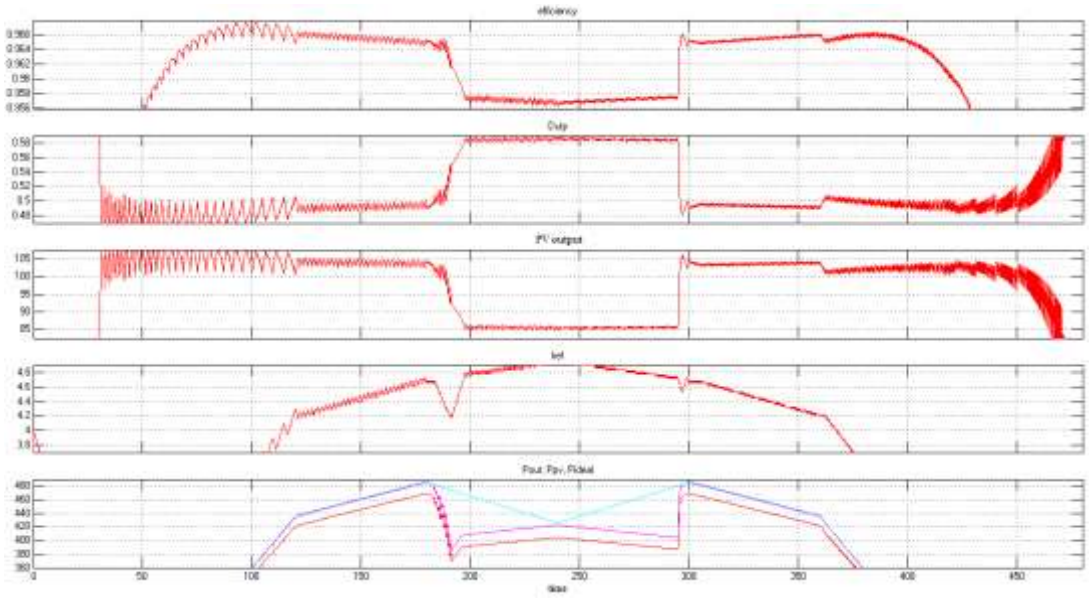

Figure 4.6. Graph of efficiency, duty, PV output, I_{ref} and P_{out}, P_{pv}, P_{ideal}, at [0 400 850 950 1000 950 850 400 0] W/m2 in specific range.

From the Figure4.6 we can observe the variation of PV output voltage from 0 V to 100V simultaneously PV output power from 0 to 480 w/m2 with respect to time. For this whole period DC converter output voltage remains constant at 200 V. moreover, we can observe the variation of converter output power, efficiency and duty cycle with respect to time (over a day) at different solar radiation condition Efficiency increased from 0 to 0.98 at noon time and the duty cycle has been adjusted from 1 to 0.5 to control converter output voltage. It can be observed from the Figures 4.5 and 4.6 observe the output voltage and output power of module and converter, the change of duty cycle of the converter over a longer day.

4.2. Generating VHDL code for FPGA

The FPGA industry sprouted from programmable read-only memory (PROM) and programmable logic devices (PLDs). PROMs and PLDs both had the option of being

programmed in batches in a factory or in the field (field-programmable). However, programmable logic was hard-wired between logic gates [22].In the late 1980s, the Naval Surface Warfare Department funded an experiment proposed by Steve Cassel man to develop a computer that would implement 600,000 reprogrammable gates. Casselman was successful and a patent related to the system was issued in 1992 [22].

HDL Coder generates portable, synthesizable VHDL and Verilog code from MATLAB functions, Simulink models, and State flow charts. The generated HDL code can be used for FPGA programming or ASIC prototyping and design.

HDL Coder provides a workflow advisor that automates the programming of Xilinx and Altera FPGAs. We can control HDL architecture and implementation, highlight critical paths, and generate hardware resource utilization estimates. HDL Coder provides traceability between your Simulink model and the generated Verilog and VHDL code, enabling code verification for high-integrity applications adhering to DO-254 and other standards. We implemented and simulated the DC-DC boost converter in the FPGA using SIMULINK MATLAB and Modelsim Simulator.

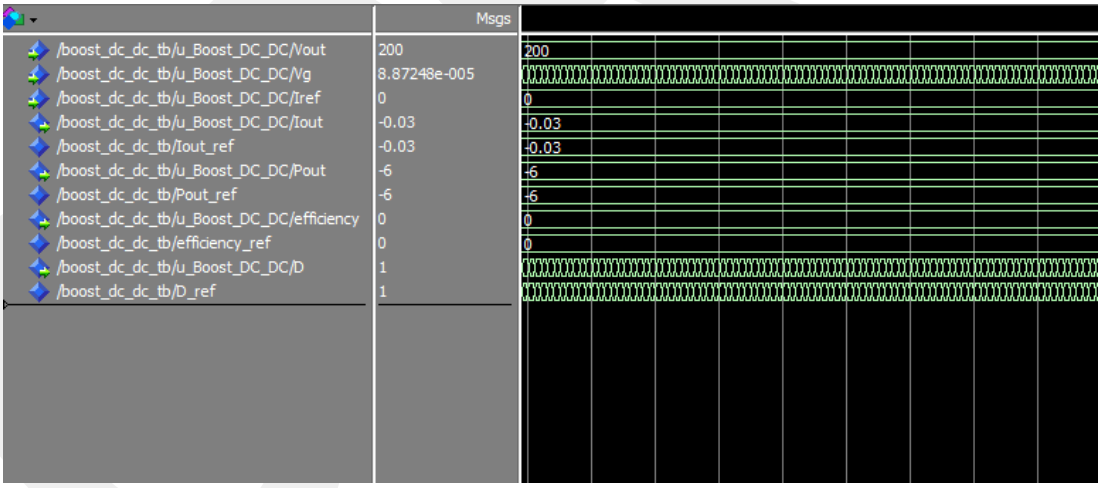

Figure 4.7.Result for system on FPGA

This figure shows how FPGAs can be used to build cost-effective and highly adaptable implementations of DC-DC boost convertor control systems.

This study proposes an FPGA-based implementation of a DC-DC boost converter. The P&O algorithm is used to track the MPP. The algorithm runs on ModelSim simulator. Integrating FPGA in DC-DC boost converter, control system provides

numerous advantages. To meet performance requirements, FPGAs are desirable since their performance can easily surpass the performance of microcontrollers and DSPs. In this thesis we used microcontroller state of FPGA. In addition, given their reprogram ability, FPGAs can be used to conduct in-circuit experimentation, testing and optimization of various parameters that affect the performance of the MPPT control system.

By the output of ModelSim result we have some output parameter as:

V_{out}, V_g, I_{ref}, I_{out}, I_{out_ref}, P_{out}, P_{out_ref}, efficiency, efficiency_ref, D and D_ref. Figure 4.13 show the primary time of simulation. As seen in the efficiency in the first step the efficiency is zero after 0.0023ms the efficiency value is come to about 0.98. After 0.009331 ms again the efficiency come to zero value.

The value in figure is the final value, also this value is change in interval of time.

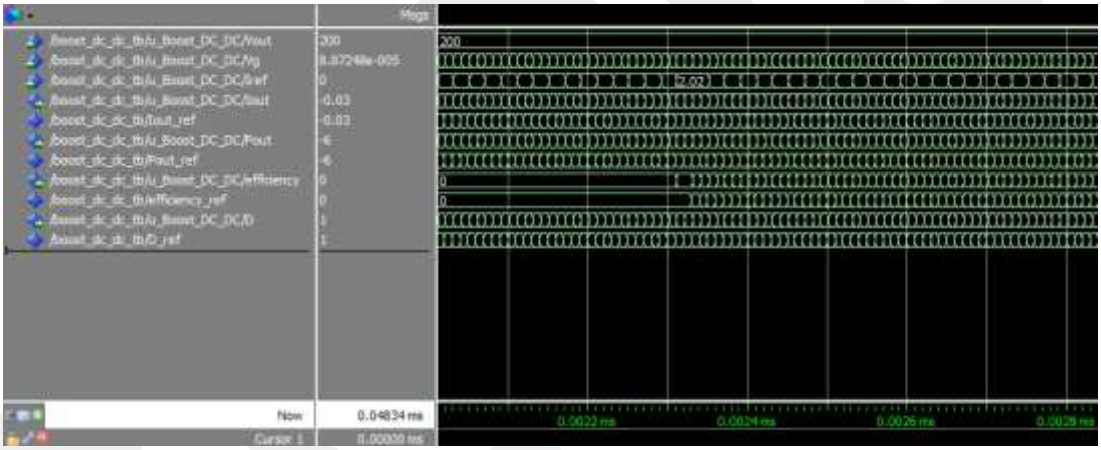

Figure 4.8.primary time and middle time of simulation

For duty cycle at starting and end of simulation we have 1 value and the middle of simulation the result is changing around 0.5. This value is the percentage of efficiency in some research this value is low than our method.

Pout is I_{out_ref}*V_{out}, the final value is shown in figure 4.8equal to -6.That we take the absolute amount.

CHAPTER 5

CONCLUSION

In this thesis, Perturbation and Observation (P&O) Algorithm has been used to improve the efficiency of solar panel photovoltaic (PV) power generation system at different temperatures and at different insolation conditions.

The P&O method is one of the most widely used system in MPPT. It checks for output power of the array and compares its varied to the direction of perturbation of the operating voltage of the array itself. Using these different methods, PV array response has been analyzed by simulating temperature and insolation parameters. Accordingly; it has been seen that the current and the voltage were affected negatively at temperature increase, and on the contrary, they were affected positively with insolation increase. It has also been seen that, the increase of the RS resistance pulled down the MPP.

The design of DC-DC boost converter is implement VHDL language to be used in Field programmable Gate Array (FPGA). The application software, MATLAB-SIMULINK, provided effortlessness in this thesis and affected the results and the credibility in a positive meaning. Also we tested the VHDL code on ModelSim simulator and we get result in Figure 4.7 and Figure 4.8.

REFERENCES

[1] Azadeh S. and Saad M., (2011) "Simulation and Hardware Implementation of Incremental Conductance MPPT With Direct Control Method Using Cuk Converter", IEEE Trans. Ind. Electron., Vol. 58, no. 4.

[2] Kinal K. ,Mukesh P., Makarand L., (2011), "MATLAB/SIMULINK Model of Solar PV Module and MPPT Algorithm", National Conference on Recent Trends in Engineering & Technology 13- 4 May.

[3] Hanja C. and Sanghoey L., (2008) "*Design and Implementation of Photovoltaic power conditioning system using a current based maximum power point tracking*", Industry Applications Society Annual Meeting, 2008. IAS '08. IEEE, vol., no., pp,.1-5,5-9 .

[4] Caston U. and Gehan A.J., (2011), "*Single Sensor boost converter-based maximum power point tracking algorithms",* Applied Power Electronics conference and Exposition(APEC), 2011 Twenty Sixth Annual IEEE vol., no., pp.1238-1243 6-11.

[5] Subudhi B., Pradhan R., (2012), "A comparative study on maximum power point tracking techniques for photovoltaic power system", Sustainable Energy, IEEE Transactions on, vol.4, no.1, pp.89-98,.

[6] Sivagamasundari M.S., Dr. Melba P. M. ,Velvizhi V.K., (2013), "Maximum Power Point Tracking For Photovoltaic System by Perturb and Observe Method Using Buck Boost Converter", International Journal of Advanced Research in Electrical, Electronics and Instrumentation Engineering, Vol. 2, Issue 6..

[7] El Ouariachi M., Mrabti T., KassmiK A.,Kassmi K., (2010), "Optimization and Modelling of Electrical Energies Produced by the Photovoltaic Panels and Systems", 18th Mediterranean Conference On Control and Automation, IEEE, June 23-25 2010, 978-1-4244-8092-1/10/ IEEE. Marrakech – Morocco.

[8] Esram T., Chapman PL., (2006),"Comparison of photovoltaic array maximum power point tracking methods", IEEE Transactions on Energy Conversion June 2007;22(2).

[9] Salas V., Olıas E., Barrado A., Lazaro A., (2006),"Review of the maximum power point tracking algorithms for stand-alone photovoltaic systems". Solar Energy Materials & Solar Cells 2006, pp. 90:1555–78.

[10] Hussein K.H., Muta I., Hoshino T. and Osakada M., (1995) "Maximum photovoltaic power tracking: an algorithm for rapidly changing atmospheric conditions" generation, IEEE Proceedings Transmission and Distribution. Vol.142, No. 1, pp:59-64.

[11] YadenM. F., KassmiK A., El Ouariachi M., Tidhaf B., and Mrabti T.,(2010) "Design and Realization of a Photovoltaic System Equipped with a Digital MPPT Control", ICMCS, IEEE conference.

[12] Veerachary M., Senjyu T. and Uezato K., (2003), "Neural-network-based maximum power-point tracking of coupled-inductor-interleaved-boost-convert ersupplied PV system using fuzzy controller", IEEE Trans. Ind. Electron. 50 (4) 749–758.

[13] Zaki A. M., Amer S. I. and Mostafa M.,(2012), "Maximum Power Point Tracking for PV System Using Advanced Neural Networks Technique ", International Journal of Emerging Technology and Advanced Engineering, Volume 2, Issue 12, December

[14] http://en.wikipedia.org/wiki/Edmond_Becquerel.

[15] http://www.synergyenviron.com/resources/solar_photovoltaic_energy.asp, 16 March 2010SynergyEnviro Engineers, (2010).

[16] Chengjiang W., Wei C., Shao S., Zhenjie C., Bin Z. and Hongyan L., (2011), "Energy Management of Stand-alone Hybrid PV System", ICSGCE 2011: 27–30.

[17] Solar Energy, (n.d.). http://www.najah.edu/page/3214, 02 June 2010.

[18] Olivia M., (1998). "Fundamentals of Photovoltaic Materials", National Solar Power Research Institute, 2-8.

[19] Sheriff F., Turcotte D. and Ross M., (2003), "PV Toolbox: A Comprehensive Set Of PV System Components for the Matlab/Simulink® Environment", SESCI CONFERENCE, August 18 - 20, Kingston, Ontario, Canada.

[20] Tsai H.L., (2008). "Development of Generalized Photovoltaic Model Using MATLAB/SIMULINK", World Congress on Engineering and Computer Science, ISBN: 978-988-98671-0-2, San Francisco, 3-6.

[21] Mukarram A.M., A. K. M. and Sharifah S., (2013) "Implementation of Field Programmable Gate Array based Maximum Power Point Tracking Controller of Photovoltaic System", International power engineering and optimization conference, IEEE.

[22]web.archive.org/web/20070412183416/http://filebox.vt.edu/users/tmagin/history.htm